AFFINITY WALK IN BATH

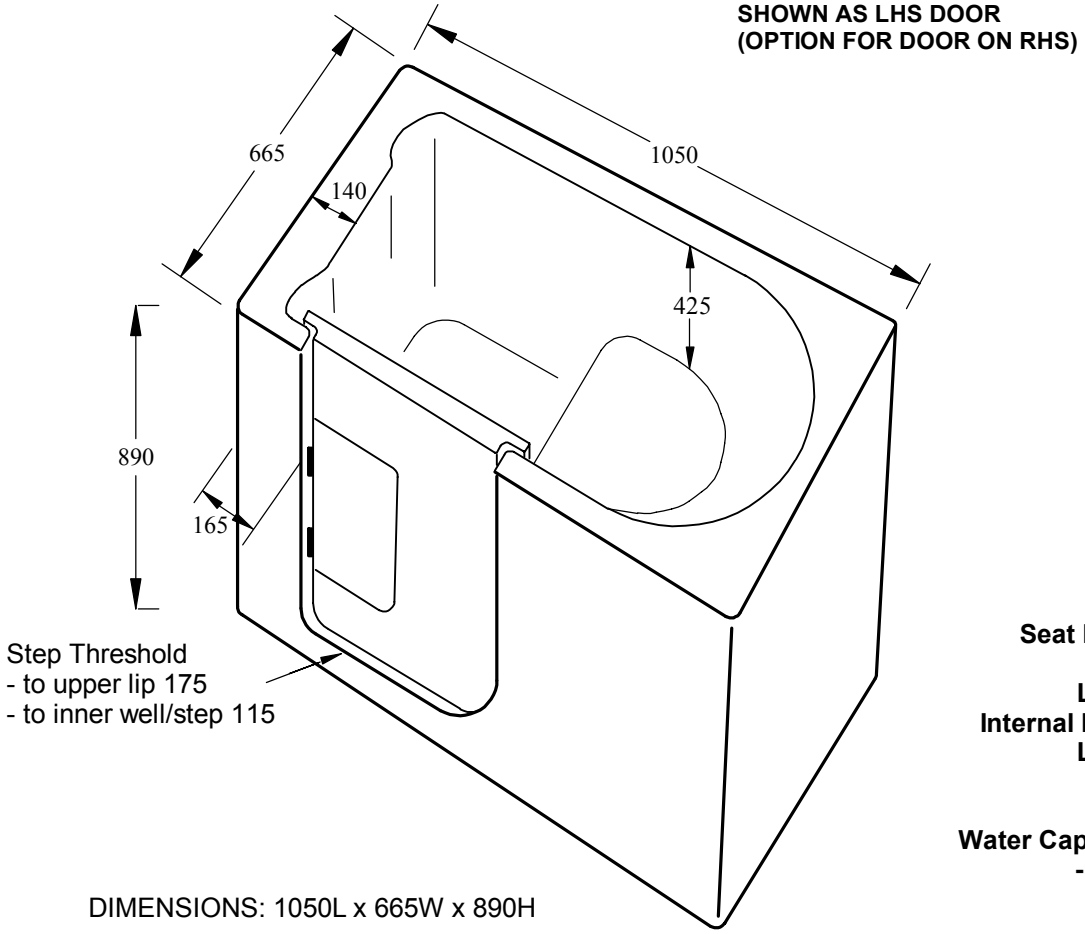

Seat Height - 320
Width - 550
Length - 370
Internal Dimensions
Length - 840
Width - 540
Depth - 750
Water Capacity - 195L
-unoccupied
2 x Wastes

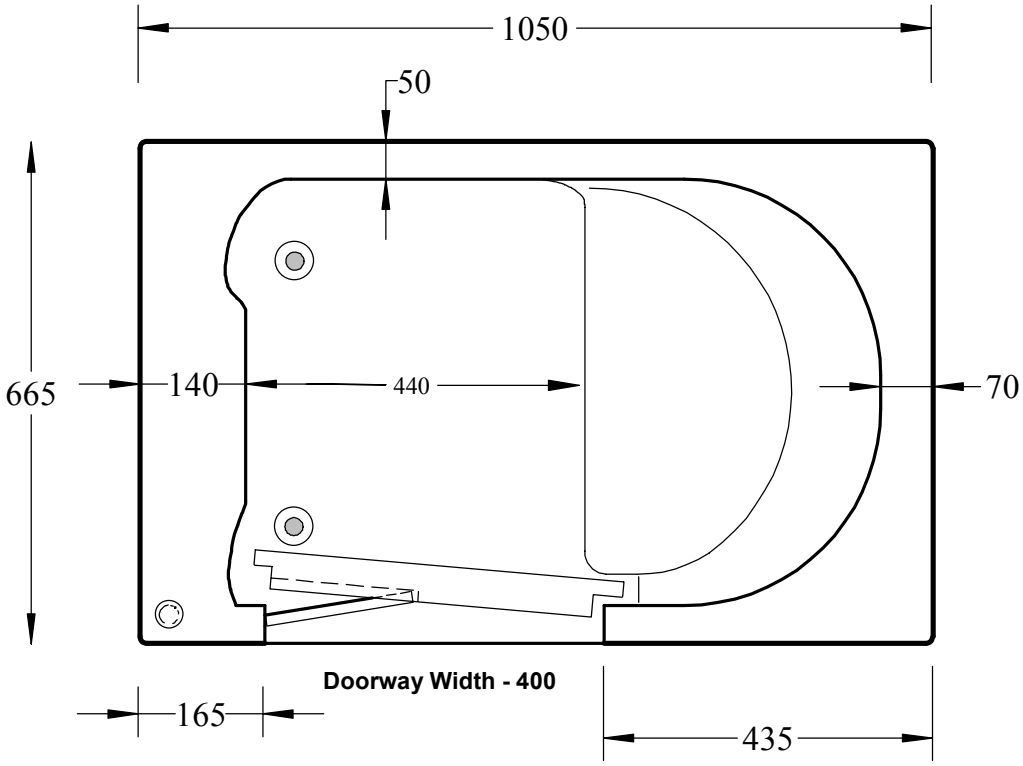

Dimensions in millimeters nominal